3.1.1 TECHNICAL DATA

MAX OPERATING PRESSURE (PS): 360 bar

PRESSURE TEST (PT): 1.43 x PS

NOMINAL CAPACITIES:
0.2 - 0.7 - 1 - 1.5 - 3 - 5 - 10 - 15 - 20 - 25 - 35 - 55 litres

WORKING TEMPERATURE: -40 ÷ +150 °C

COMPRESSION RATIO (Po : P2): max. 1 : 4

FLUID VISCOSITY RANGE: 10 ÷ 400 cSt

RECOMMENDED VISCOSITY: 36 cSt

FLUID CONTAMINATION DEGREE:
class 21/19/16 according to ISO 4406/99

BODY MATERIAL:
- carbon steel shell painted with rust inhibitor RAL 8012
- nickel coating 25 - 40 µ
- stainless steel AISI 316L
- internal and external coating with RILSAN th. 0.6 mm

VALVES MATERIAL:
- phosphated or galvanized carbon steel in compliance with Directive 2002/95/EC (RoHS) to resist to corrosion
- stainless steel AISI 316L
- nickel coating 25-40 µ

BLADDER MATERIAL:
- P = Nitrile rubber (NBR)
- F = Low temp. nitrile rubber
- H = Nitrile for hydrocarbons
- K = Hydrogenated nitrile (HNBR)
- B = Butyl (IIR)
- E = Ethylene-propylene (EPDM)
- N = Chloroprene (Neoprene)
- Y = Epichlorohydrin (ECO)
- V = Fluorocarbon (FPM)

See Table 3.1c and/or Chapter 1.5

FILLING VALVE CONNECTION:
- 5/8”-UNF std
- 7/8” UNF
- ¼” BSP

FLUID PORT CONNECTION: see 3.1dc - 3.1df - 3.1eb - 3.1ec - 3.1fb - 3.1fd

FLOW RATE: see Table 3.1db

WEIGHT: see Table 3.1db - 3.1df

3.1a

3.1.2 HYDRAULIC SYMBOL

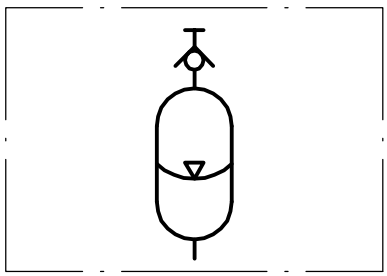

3.1b

3.1.3 “AS and ASP” BLADDER ADVANTAGES

- dirt tolerant
- light weight
- compact
- simple construction
- quick response
- works well on water, low lubricity fluids
- quick, easy installation
- low cost

3.1.4 DESCRIPTION

Bladder-type accumulators consist of a seamless cylindrical pressure vessel made of high-tensile steel.
The accumulator is subdivided into a gas and fluid side by an elastic bladder mounted in the interior of the vessel.
The bladder is charged with nitrogen to the specified gas charge pressure P0 by means of gas valve.
When the fluid is pressed into the accumulator, the gas in the bladder is compressed and hence the pressure increased.
The gas volume reduces and on the fluid side, the fluid can flow into the accumulator. As soon as the pressure on the fluid side falls below the gas pressure, the accumulator is emptied.
Oil valve is provided in the oil port of the bladder-type accumulator and closes when the pressure on the gas side is higher than the one on the fluid side.
This prevents draining of the bladder into the oil channel and thus the bladder from being destroyed.
When the minimum operating pressure is reached, a small oil volume is to be maintained between the bladder and the fluid volume (approx. 10% of the nominal capacity of the hydraulic accumulator), in order that the bladder does not hit the valve during every expansion process.
Gas valve consists of external caps, sealing cap, filling valve, gas valve body and rubber coated washer. These parts can be replaced separately.
The nameplate shows the technical data and features of the hydraulic accumulator.

3.1.5 EUROPE MARKET

All hydraulic accumulators are pressure vessels and are subject to the national regulations and directives valid at the place of installation.
Bladder accumulator type AS, up to and including 1 litre, must not be CE marked.
Bladder accumulator type ASP, up to and including 1 litre and max. pressure less than 200 bar, must not be CE marked.
For bladder accumulator type AS, greater than 1 litre and, in the case of ASP, greater than 1 litre or 1 litre but with max. pressure higher than 200 bar every shipping batch is complete of a conformity declaration and instruction of use and maintenance and/or all documents requested.
All vessel categories (see Table 3.1e) must be protected by means of a pressure relief valve in accordance with Directive 97/23/EC.

3.1.6 ACCESSORIES

For support equipment, see Cap. 7
For gas side’s safety equipment, see Cap. 8
For fluid side’s safety equipment, see Cap. 9
For pre-loading and charging set, see Cap. 11
For other components, see Cap. 12

EPE ITALIANA s.r.l. - Viale Spagna,112 • 20093 Cologno Monzese (Mi) Italy
Tel.: +39 02 25459028 • Fax: +39 02 25 25459773 • E-mail: epeitaliana@epeitaliana.it • Internet: www.epeitaliana.it

3.1.7 BLADDER-TEMPERATURE-LIQUID COMPATIBILITY

When selecting the accumulator variant, pay attention to the following non-binding notes with regard to hydraulic fluid, bladder material and the permissive temperature range. (see Section 1.5)

Code letter	Polymer	ISO	Temperature range (°C)	Some of the liquids compatible with the polymer
P	Standard nitrile (Perburan)	NBR	-20 ÷ +80	Aliphatic hydrocarbons (propane, butane, gasoline, oils, mineral greases, diesel fuel, fuel oil, kerosene), mineral greases and oils, HFA - HFB - HFC fluids, many dilute acids, alkalis, saline solutions, water, water glycol.
F	Low temperature nitrile	NBR	-40 ÷ +70	The same as with standard nitrile + a number of different types of Freon. (This contains less acrylonitrile than the standard and is therefore more suitable for low temperatures, but its chemical resistance is slightly lower).
H	Nitrile for hydrocarbons	NBR	-10 ÷ +90	Regular and premium grade slightly aromatic gasoline (and all the liquids for standard nitrile).
K	Hydrogenated nitrile	HNBR	-30 ÷ +130	The same as with standard nitrile but with excellent performance at high and low temperatures.
B	Butyl	IIR	-30 ÷ +100	Hot water up to 100°C, glycol-based brake fluids, many acids and bases, salt solutions, polar solvents such as alcohols, ketones and esters, polyglycol-based hydraulic fluids (HFC fluids) and bases of esters of phosphoric acid (HFD-R fluids), silicone oils and greases, Skydol 500 and 7000, resistance to ozone, aging and weathering.
E	Ethylene-Propylene	EPDM	-30 ÷ +100	Hot water up to 100°C, glycol-based brake fluids, many organic and inorganic acids, detergents, solutions of sodium and potassium, phosphate ester-based hydraulic fluids, (HFD-R), silicone oils and greases, many polar solvents (alcohol, ketones, esters), Skydrol 500 and 7000, resistance to ozone, aging and weathering.
N	Chloroprene (Neoprene)	CR	-30 ÷ +100	Mineral oils of paraffin, silicone oils and greases, water and aqueous solutions, refrigerants (ammonia, carbon dioxide, Freon), naphthenic mineral oils, low molecular aliphatic hydrocarbons (propane, butane, fuel), brake fluids based on glycol, better resistance to ozone, weathering and aging compared to NBR rubber.
Y	Epichloridrin	ECO	-30 ÷ +110	Mineral oils and greases, aliphatic hydrocarbons (propane, butane and gasoline), silicone oils and greases, water at room temperature, resistance to ozone, aging and weathering.
V	Fluorocarbon	FPM	-10 ÷ +150	Mineral oils and greases, non-flammable fluids of HFD group, silicone oils and greases, animal and vegetable oils and greases, aliphatic hydrocarbons (gasoline, butane, propane, natural gas), aromatics hydrocarbons (benzene, toluene), chlorinated hydrocarbons (Tetrachloroethylene, carbon tetrachloride), fuel (regular, super and containing methanol), excellent resistance to ozone, weathering and aging.

For other hydraulic fluid and/or temperatures, please consult us.

3.1c

3.1.8 ORDER CODE

1	2	3	4	5	6	7 - 8	9		10		11	12	13	14	15		16
AS	25	P	360	C	R	G4	V	-	8	-	C	0	C	0	R250	/	30

1 Series

Bladder accumulator	= **AS**
Bladder accumulator for fluid gr. 1 (dangerous)	= **ASP**

2 Nominal capacity

0.2 lt	= **0.2**
0.7 lt	= **0.7**
1 lt	= **1**
1.5 lt	= **1.5**
3 lt	= **3**
5 lt	= **5**
10 lt	= **10**
15 lt	= **15**
20 lt	= **20**
25 lt	= **25**
35 lt	= **35**
55 lt	= **55**

3 Bladder material

Nitrile rubber (NBR)	= P
Nitrile for low temp.	= F
Nitril for hydrocarbons	= H
Hydrogenated nitrile (HNBR)	= K
Butyl (IIR)	= B
Ethylene-propylene (EPDM)	= E
Chloroprene (Neoprene)	= N
Epichlorohydrin (ECO)	= Y
Fluorocarbon (FPM)	= V

4 Max working pressure (PS)

See the table on front page

5 Body material

Carbon steel	= **C**
Nickel coated carbon steel 25 µ	= **N**
Nickel coated carbon steel 40 µ	= **M**
Stainless steel	= **X**
Rilsan coating	= **V**

6 Fluid port connection

See the table on front page

7 - 8 Dimension of the connection fluid or 7+8 table

See the table on front page

16 Precharge pressure (bar)

Standard 30 bar = **0 ÷ 300** (< PS)

15 Other variants

See the table on front page

14 Variants of gas side

Standard	= **0**
Only cap in stainless steel	= **1**
Brass nameplate	= **2**
Other numbers/variants to be requested EPE	

13 Gas valve material

Carbon steel	= **C**
Nickel coated carbon steel 25 µ	= **N**
Nickel coated carbon steel 40 µ	= **M**
Stainless steel	= **X**

12 Variants of fluid side

Standard	= **0**
Adapter in stainless steel (R)	= **1**
Button and spring in stainless steel	= **2**
Other numbers/variants to be requested EPE	

11 Fluid valve material

Carbon steel	= **C**
Nickel coated carbon steel 25 µ	= **N**
Nickel coated carbon steel 40 µ	= **M**
Stainless steel	= **X**

10 Test and certification

Factory testing	= **0**
TR (Russia)	= **1**
Australian Standard	= **2**
ML (China)	= **3**
RINA	= **4**
PED 97/23/EC (for capacities greater than 1 l)	= **8**
ATEX 94/9EC	= **9**
DNV	= **10**
RTN Passport (Ukraine)	= **11**
Algeria passport	= **12**
Standard regulation (NR13) (Brazil)	= **13**
Tunisia passport	= **14**

9 Type of filling valve

Standard filling valve 5/8" UNF thread	= **V**
Standard filling valve with 5/8" UNF thread in stainless steel	= **VX**
Without filling valve (thread hole M12x1.5)	= **V0**
Brass filling valve ¼" BSP	= **V2**
Filling valve 7/8" UNF	= **V4**

Special variants upon request

EPE ITALIANA s.r.l. - Viale Spagna,112 • 20093 Cologno Monzese (Mi) Italy
Tel.: +39 02 25459028 • Fax: +39 02 25 25459773 • E-mail: epeitaliana@epeitaliana.it • Internet: www.epeitaliana.it

4 Max working pressure (PS)		
Capacity litres	Carbon steel	Stainless steel
0,2 ÷ 3	**360** (100 only for ASP type)	**150 - 210 - 360**
1 ÷ 3	**343** (for Certification RINA [4])	**-**
5 ÷ 55	**360** (100 only for ASP type: 210 only for the version with connection L or other pressure related to connections B or U)	**80 - 150 - 210 -360**
5 ÷ 55	**343** (for Certification RINA [4])	**-**

6 Fluid port connection			
For AS0.7÷55	BSP ISO 228 with chamfer for OR (std)	=	**A**
For AS0.2	BSP ISO 228 (std)	=	**G**
For AS3÷55	Metric	=	**M**
For AS0.7÷55	NPT-F	=	**P**
For AS3÷55	internal thread SAE	=	**S**
For AS3÷55	adapter for flange SAE 3000 Psi	=	**L**
For AS3÷55	adapter for flange SAE 6000 Psi	=	**H**
For AS0.7÷55	flange ANSI	=	**B**
For AS0.7÷55	flange UNI - DIN	=	**U**
For AS0.7÷55	square flange	=	**Q**
For AS0.7÷55	adapter *	=	**R**

* assembled on the fluid valve connection type A

7 Dimension of the fluid connection

For the type of connection:

A	(0.7÷1.5 l) ¾”	=	**5**
	(3÷5 l) 1” ¼	=	**7**
	(10÷55 l) 2”	=	**9**
G	(0.2 l) ½”	=	**4**
M	(3÷5 l) 40x1.5	=	**40/1.5**
	(10÷55 l) 50x1.5	=	**50/1.5**
P	(0.7÷1.5 l) ¾”	=	**5**
	(3÷5 l) 1” ¼	=	**7**
	(10÷55 l) 2”	=	**9**
S	(0.7÷1.5 l) 1” 1/16 12UN	=	**1 1/16-12**
	(3÷5 l) 1” 5/8 12UN	=	**1 5/8-12**
	(10÷55 l) 1” 7/8 12UN	=	**1 7/8-12**
L	(3÷5 l) 1” ¼ SAE3000	=	**7**
	(10÷55 l)1” ½ SAE 3000	=	**8**
	2” SAE 3000	=	**9**
H	(3÷5 l) 1” ¼ SAE6000	=	**7**
	(10÷55 l)1” ½ SAE 6000	=	**8**
	2” SAE 6000	=	**9**
B	(0.7÷55 l)		**DIMENSION/RATING**

Former. 1” ANSI 1500 = 1/1500 (Pmax = 250 bar)

U	(0.7÷55 l)		**DN/PN**

Former. DN50 PN100 = 50/100 (Pmax = 100 bar)

Q	(3÷5 l) 1” ¼	=	**7**
	(10÷55 l) 2”	=	**9**
R	(0.7÷55 l) Blind	=	**0**
R	(0.7÷55 l) internal thread BSP ISO 228	=	**G***
	NPT-F	=	**P***
	BSPT	=	**N***
	SAE	=	**S***
	Metric	=	**M***

*Variant in table 8

15 Other variants

Adapter + rupture disc set at xxx bar (see Section 8.2)	=	**Rxxx**
Adapter + Safety valve, type VS224/TX set at xxx bar	=	**Gxxx**
Adapter + Needle Valve of ¼” BSP	=	**EG2**
Adapter + Stainless steel needle Valve of ¼ BSP	=	**EG2X**
Adapter + excluding device with with full scale pressure gauge of xxx bar	=	**EMxxx**
Adapter + excluding device of 90° with full scale pressure gauge of xxx bar	=	**ELMxxx**
Flushing with degree of contamination ≤ x	=	**Fx**
75-80 µ thick polyurethane paint with colour to be specified	=	**Wxxx**
Off-shore paint with colour to be specified	=	**Zxxx**
NORSOK System 1 paint with colour to be specified	=	**K1**
NORSOK System 7 paint with colour to be specified	=	**K7**

other variants upon request

8 Dimension

1/8“	=	**1**	4/4“	=	**5**
1/4“	=	**2**	1“	=	**6**
3/8“	=	**3**	1“ ¼“	=	**7**
1/2“	=	**4**	1“ ½“	=	**8**

Dimension in inch - No.of pitch for inch

Diameter/pitch

Special variants on request

3.1.9 DIMENSIONS

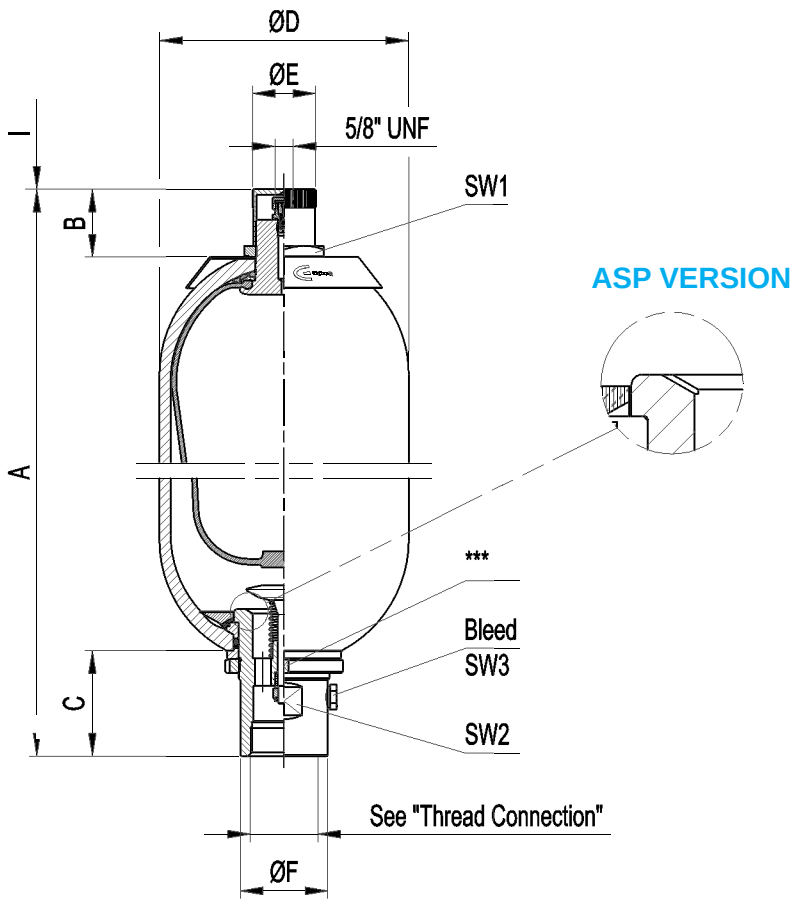

3.1d

Acc. type AS-ASP in carbon steel	Nominal gas volume litres	Effective gas volume litres	Working pressure bar	Ped cat. fluids of group 2 AS	Ped cat. fluids of group 1 ASP	Max.diff. pressure P2-P1 bar	Flow rate l/min	Max.comp. ratio P0/P2	A mm	B mm	C mm	ØD mm	ØE mm	ØF mm	I mm	SW 1 mm	SW 2 mm	SW 3 mm	Bleed	Acc. dry weight kg
AS/ASP 0,2	0,2	0,2	360	Art.3 (3)	III	100	160	1:4	252 ± 2	23	40	53	20	26	140	24	23	4*	M5	1,7
AS/ASP 0,7	0,7	0,65	360	Art.3 (3)	III	100	300	1:4	280 ±1,5	47	52	90	25	36	140	32	32	4*	M5	4,2
AS/ASP 1	1	1	360	Art.3 (3)	III	100	300	1:4	296 ± 5	47	52	114	25	36	140	32	32	4*	M5	5,2
AS/ASP 1,5	1,5	1,5	360	II	III	100	300	1:4	355 ±5	47	52	114	25	36	140	32	32	4*	M5	6,3
AS/ASP 3	3	2,95	360	III	IV	100	600	1:4	554 ± 8	47	65	114	25	53	140	32	50	4*	M5	11
AS/ASP 5	5	5	360	III	IV	100	600	1:4	458 ± 10	47	65	168	25	53	140	32	50	4*	M5	15
AS/ASP 10	10	9,1	360	IV	IV	100	1000	1:4	569 ± 10	60	101	220	60	77	140	70	70	19**	1/4" BSP	33
AS/ASP 15	15	14,5	360	IV	IV	100	1000	1:4	719 ± 10	60	101	220	60	77	140	70	70	19**	1/4" BSP	43
AS/ASP 20	20	18,2	360	IV	IV	100	1000	1:4	879 ± 10	60	101	220	60	77	140	70	70	19**	1/4" BSP	48
AS/ASP 25	25	23,5	360	IV	IV	100	1000	1:4	1044 ±15	60	101	220	60	77	140	70	70	19**	1/4" BSP	59
AS/ASP 35	35	33,5	360	IV	IV	100	1000	1:4	1393 ±15	60	101	220	60	77	140	70	70	19**	1/4" BSP	78
AS/ASP 55	55	50	360	IV	IV	100	1000	1:4	1904 ±15	60	101	220	60	77	140	70	70	19**	1/4" BSP	108

* Allen wrench ** Ex. wrench *** see chapter 3.1.12.2 table 3.1ab

3.1db

* The maximum differential pressure is the maximum allowable difference between the maximum pressure and the minimum working pressure (P2-P1) to have an infinite life cycle of the accumulator (greater than 2,000,000 cycles).
** Flow rate measured using mineral oil with viscosity of 36 cSt at 50°C and ΔP = 5 bar

EPE ITALIANA s.r.l. - Viale Spagna,112 • 20093 Cologno Monzese (Mi) Italy
Tel.: +39 02 25459028 • Fax: +39 02 25 25459773 • E-mail: epeitaliana@epeitaliana.it • Internet: www.epeitaliana.it

3.1.9.1 STANDARD THREAD CONNECTIONS

Dimensions	Connection Type	Accumulator type	Complete spare valve order code	Ød	ØD mm	ØF mm	H mm
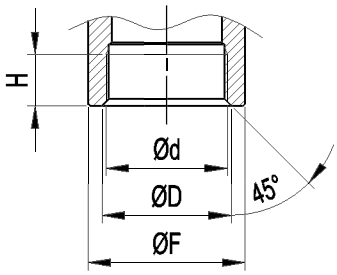	A BSP ISO 228 with chamfer for OR	AS/ASP 0,2	-	-	-	-	-
		AS/ASP 0,7	V 2023-A5-**/*	3/4" BSP	28,8	36	19
		AS/ASP 1	V 2024-A5-**/*				
		AS/ASP 1,5					
		AS/ASP 3	V 2025-A7-**/*	1" 1/4 BSP	46	53	25
		AS/ASP 5	V 2044-A7-**/*				
		AS/ASP 10 ÷ 55	V 2064-A9- **/*	2" BSP	63,35	77	28
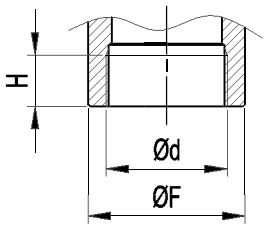	G BSP ISO 228	AS/ASP 0,2	V 2004-G4-**/*	1/2" BSP	-	26	15
		AS/ASP 0,7	-	-	-	-	-
		AS/ASP 1	-	-	-	-	-
		AS/ASP 1,5	-	-	-	-	-
		AS/ASP 3	-	-	-	-	-
		AS/ASP 5	-	-	-	-	-
		AS/ASP 10 ÷ 55	-	-	-	-	-
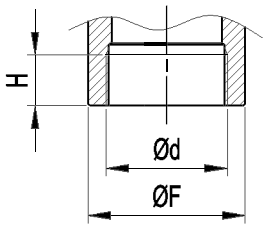	M Metric	AS/ASP 0,2	-	-	-	-	-
		AS/ASP 0,7					
		AS/ASP 1					
		AS/ASP 1,5					
		AS/ASP 3	V 2025-M40x1.5-**/*	M40x1,5	-	53	25
		AS/ASP 5	V 2044-M40/1.5-**/*				
		AS/ASP 10 ÷ 55	V 2064-M50/1.5-**/*	M50x1,5	-	77	28
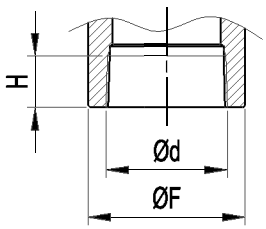	P NPT-F	AS/ASP 0,2	-	-	-	-	-
		AS/ASP 0,7	V 2023-P5-**/*	3/4" NPT-F	-	36	Thread plug gage
		AS/ASP 1	V 2024-P5-**/*				
		AS/ASP 1,5					
		AS/ASP 3	V 2025-P7-**/*	1" 1/4 NPT-F	-	53	
		AS/ASP 5	V 2044-P7-**/*				
		AS/ASP 10 ÷ 55	V 2064-A9- **/*	2" NPT-F	-	77	
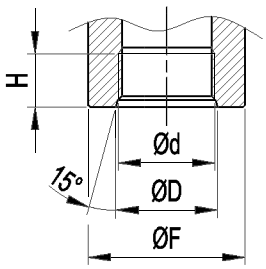	S SAE thread	AS/ASP 0,2	-	-	-	-	-
		AS/ASP 0,7	V 2023-S1 /16-12-**/-*	1" 1/16 12 UN	29,16	36	19
		AS/ASP 1	V 2024-S1 /16-12-**/-*				
		AS/ASP 1,5					
		AS/ASP 3	V 2025-S1 5/8-12-**/-*	1" 5/8 12 UN	43,5	53	23
		AS/ASP 5	V 2044-S1 5/8-12-**/-*				
		AS/ASP 10 ÷ 55	V 2064-S1 7/8-12-**/-*	1" 7/8 12 UN	49,84	77	26

* Gasket material ** Component material

For "ASP" version valve order code become V xxxxP - thread version

3.1dc

3.1.9.2 ADAPTER FOR FLANGE SAE 3000/6000 PSI (L/H)

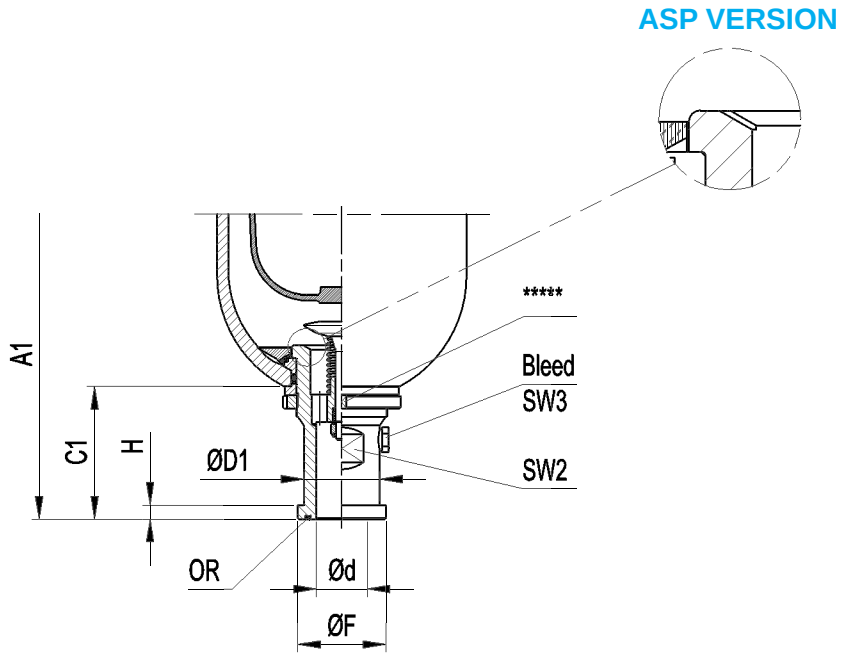

3.1de

Acc. type AS-ASP in carbon steel	Dim.	A1 mm	C1 mm	SW2 mm	SW3 mm	Bleed	Ød mm	SAE 3000 (L) Spare valve order code	SAE 3000 (L) ØD1 mm	SAE 3000 (L) ØF mm	SAE 3000 (L) H mm	SAE6000 (H) Spare valve order code	SAE6000 (H) ØD1 mm	SAE6000 (H) ØF mm	SAE6000 (H) H mm	OR (Included)	Acc. dry weight kg
AS / ASP 0,2	-	-	-	-	-	-	-	-	-	-	-	-	-	-	-	-	-
AS / ASP 0,7	-	-	-	-	-	-	-	-	-	-	-	-	-	-	-	-	-
AS / ASP 1	-	-	-	-	-	-	-	-	-	-	-	-	-	-	-	-	-
AS / ASP 1,5	-	-	-	-	-	-	-	-	-	-	-	-	-	-	-	-	-
AS / ASP 3	1"	589 ± 8	100	38	4***	M5	-	-	-	-	-	V 2025-H6-**/*	38	47,6	9,5	0010R4131-*	11
	1"1/4	578 ± 8	89				31	V 2025-L7-**/*	43	50,8	8	V 2025-H7-**/*	44	53,3	10,3	0010R4150-*	
AS / ASP 5	1"	493 ± 10	100	38	4***	M5	-	-	-	-	-	V 2044-H6-**/*	38	47,6	9,5	0010R4131-*	15
	1"1/4	482 ± 10	89				31	V 2044-L7-**/*	43	50,8	8	V 2044-H7-**/*	44	53,3	10,3	0010R4150-*	
AS / ASP 10	1"1/2	583 ± 10	115	42	19****	1/4"	32	V 2064-L8-**/*	50	60,3	8	V 2064-H8-**/*	51	63,5	12,5	0010R4187-*	33
	2"			55		BSP	45	V 2064-L9-**/*	62	71,5	9,5	V 2064-H9-**/*	67	77,6		0010R4225-*	
AS / ASP 15	1"1/2	733 ± 10	115	42	19****	1/4"	32	V 2064-L8-**/*	50	60,3	8	V 2064-H8-**/*	51	63,5	12,5	0010R4187-*	43
	2"			55		BSP	45	V 2064-L9-**/*	62	71,5	9,5	V 2064-H9-**/*	67	77,6		0010R4225-*	
AS / ASP 20	1"1/2	893 ± 10	115	42	19****	1/4"	32	V 2064-L8-**/*	50	60,3	8	V 2064-H8-**/*	51	63,5	12,5	0010R4187-*	48
	2"			55		BSP	45	V 2064-L9-**/*	62	71,5	9,5	V 2064-H9-**/*	67	77,6		0010R4225-*	
AS / ASP 25	1"1/2	1058 ± 15	115	42	19****	1/4"	32	V 2064-L8-**/*	50	60,3	8	V 2064-H8-**/*	51	63,5	12,5	0010R4187-*	59
	2"			55		BSP	45	V 2064-L9-**/*	62	71,5	9,5	V 2064-H9-**/*	67	77,6		0010R4225-*	
AS / ASP 35	1"1/2	1408 ± 15	115	42	19****	1/4"	32	V 2064-L8-**/*	50	60,3	8	V 2064-H8-**/*	51	63,5	12,5	0010R4187-*	78
	2"			55		BSP	45	V 2064-L9-**/*	62	71,5	9,5	V 2064-H9-**/*	67	77,6		0010R4225-*	
AS / ASP 55	1"1/2	1918 ± 15	115	42	19****	1/4"	32	V 2064-L8-**/*	50	60,3	8	V 2064-H8-**/*	51	63,5	12,5	0010R4187-*	108
	2"			55		BSP	45	V 2064-L9-**/*	62	71,5	9,5	V 2064-H9-**/*	67	77,6		0010R4225-*	

* Gasket material ** Component material *** Allen wrench **** Ex. Wrench ***** see chapter 3.1.12.2 table 3.1ab

For "ASP" version valve order code become V xxxxP - thread version

3.1df

EPE ITALIANA s.r.l. - Viale Spagna,112 • 20093 Cologno Monzese (Mi) Italy
Tel.: +39 02 25459028 • Fax: +39 02 25 25459773 • E-mail: epeitaliana@epeitaliana.it • Internet: www.epeitaliana.it

3.1.9.3 FLANGE CONNECTION TYPE ANSI / UNI DIN (B/U)

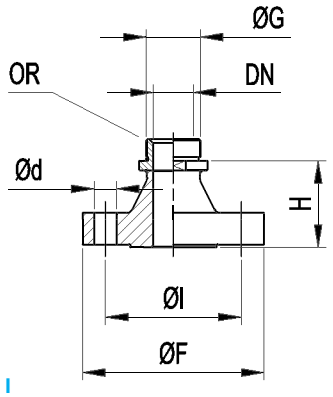

Fig. I

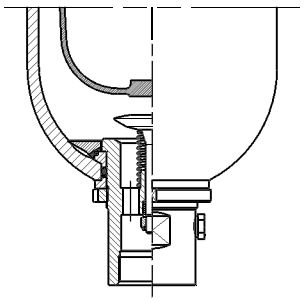

CONNECTION "A" TYPE

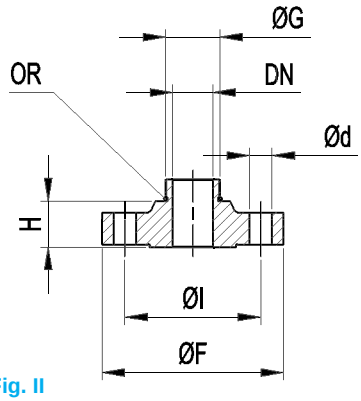

Fig. II

3.1ea

	Accumulator type	Spare flange order code	Ref. Directive UNI	Ref. Directive DIN	DN mm	PN bar	Fig.	Ø F mm	Ø I mm	Ød mm	N° Holes	H mm	G BSP	OR (Included)
U (UNI-DIN)	AS / ASP 0,7 - 1 - 1,5	F 2205 - ** / *	2284	2635	20	40	II	105	75	14	4	23	3/4"	0010R2093-*
		F 2206 - ** / *	6086	2628		250		135	95	18	4	45		
	AS / ASP 3 - 5	F 2211 - ** / *	2284	2635	25	40	I	115	85	14	4	51	1"1/4	0010R3150-*
		F 2212 - ** / *	6086	2628		250		150	105	22	4	76		
		F 2215 - ** / *	2284	2635	32	40	II	140	100	18	4	22		
		F 2216 - ** / *	6086	2628		250		165	120	22	4	55		
	AS / ASP 10 ÷ 55	F 2221 - ** / *	2282	2633	25	16	I	115	85	14	4	49	2"	0010R3218-*
		F 2222 - ** / *	2284	2635		40		115	85	14	4	51		
		F 2223 - ** / *	6086	2628		250		150	105	22	4	76		
		F 2227 - ** / *	2284	2635	40	40	I	150	110	18	4	56		
		F 2228 - ** / *	6086	2628		250		185	135	25	4	91		
		F 2231 - ** / *	2282	2633	50	16	II	165	125	18	4	23		
		F 2232 - ** / *	2285	2636		64		185	135	22	4	40		
		F 2233 - ** / *	6086	2628		250		200	150	25	8	61		

* Gasket material ** Flange material Others size on request

3.1eb

	Accumulator type	Spare flange order code	Ref. Directive	DN inch	PN lbs	Fig.	Ø F mm	Ø I mm	Ød mm	N° Holes	H mm	G BSP	OR (Included)
B (ANSI)	AS / ASP 0,7 - 1 - 1,5	F 2207 - ** / *	B16.5	3/4"	300	II	117,5	82,5	19	4	40	3/4"	0010R2093-*
		F 2208 - ** / *	B16.5		1500		130	88,9	22,5	4	59		
	AS / ASP 3 - 5	F 2213 - ** / *	B16.5	1"	300	I	123,5	88,9	22,5	4	73	1"1/4	0010R3150-*
		F 2214 - ** / *	B16.5		1500		149,5	101,6	25,4	4	90		
		F 2217 - ** / *	B16.5	1" 1/4	300	II	133,3	98,4	19	4	44		
		F 2218 - ** / *	B16.5		1500		159	111,1	25,4	4	58		
	AS / ASP 10 ÷ 55	F 2225 - ** / *	B16.5	1"	300	I	123,5	88,9	19	4	73	2"	0010R3218-*
		F 2226 - ** / *	B16.5		1500		149,5	101,6	25,4	4	90		
		F 2229 - ** / *	B16.5	1" 1/2	300	I	155,6	114,3	22,2	4	79		
		F 2230 - ** / *	B16.5		1500		178	123,8	28,5	4	100		
		F 2235 - ** / *	B16.5	2"	400	II	165	127	19	8	55		
		F 2236 - ** / *	B16.5		1500		216	165,1	25,4	8	83		

* Gasket material ** Flange material Others size on request

3.1ec

3.1.9.4 SQUARE FLANGE CONNECTION

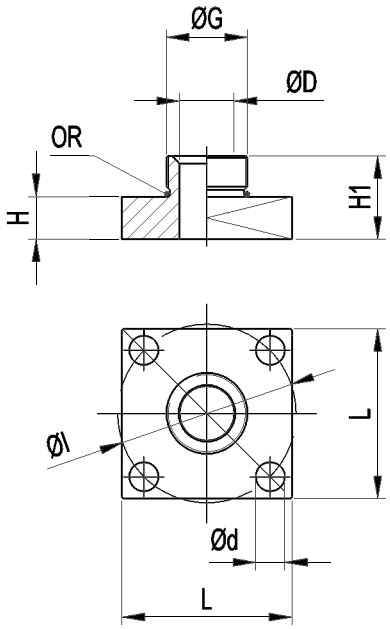

3.1fa

Accumulator type	Spare square flange order code	Ø G BSP	Ø D mm	L mm	Ø l mm	H mm	Ø d mm	H 1 mm	Weight Kg	OR (Included)
AS / ASP 3 - 5	F 2454 A7 - ** / *	1" 1/4 BSP	26	100	105	25	17.5	49	0,8	0010R3150 - *
AS / ASP 10 ÷ 55	F 2455 A9 - ** / *	2" BSP	32						0,9	0010R3218 - *

* Gasket material ** Square flange material Weigth indicated only for blind version

3.1fb

3.1.9.5 ADAPTERS

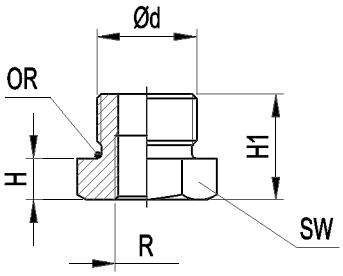

Fig. I

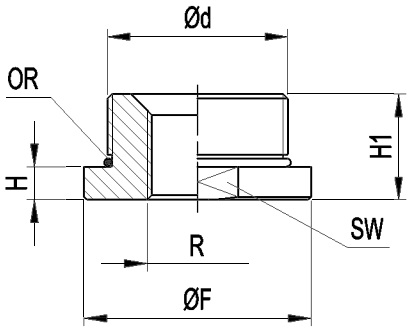

Fig. II

3.1fc

Accumulator type	Order code	Ød Acc. connection	R**** Out connections (0 = blind)	Fig.	SW mm	Ø F mm	H mm	H1 mm	OR (Included)	Weight Kg
AS / ASP 0,7 - 1 - 1,5	R - A5*** - ** / *	3/4" BSP	1/8" ÷ 3/8" BSP - NPT - BSPT	I	32	-	11	28	0010R2093 - *	0,14
			1/2" BSP - NPT - BSPT	I			28	45		0,27
AS / ASP 3 - 5	R - A7*** - ** / *	1" 1/4 BSP	1/8" ÷ 1" BSP - NPT - BSPT	II	48	53	11	32	0010R3150 - *	0,41
AS / ASP 10 ÷ 55	R - A9*** - ** / *	2" BSP	1/8" ÷ 1" 1/2 BSP - NPT - BSPT	II	70	75	11	35	0010R3218 - *	0,86

* Gasket material ** Adapter material *** See chapter 3.1.8 table 7 - 8 Weigth indicated only for blind version

**** R Out connections type "S" and "M" thread on request

3.1fd

EPE ITALIANA s.r.l. - Viale Spagna,112 • 20093 Cologno Monzese (Mi) Italy
Tel.: +39 02 25459028 • Fax: +39 02 25 25459773 • E-mail: epeitaliana@epeitaliana.it • Internet: www.epeitaliana.it

3.1.10. SPARE PARTS CODE (STANDARD VERSION)

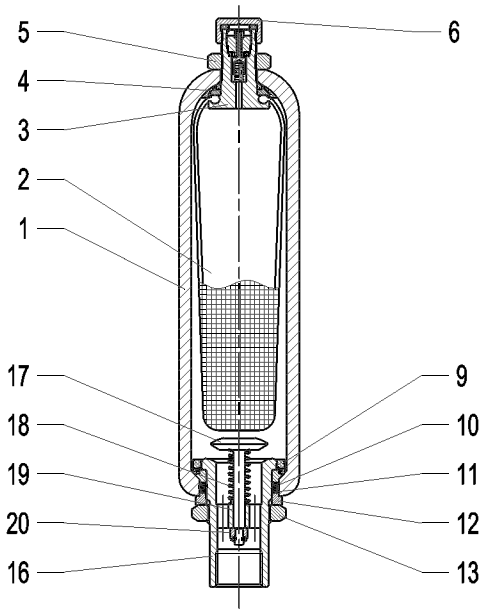

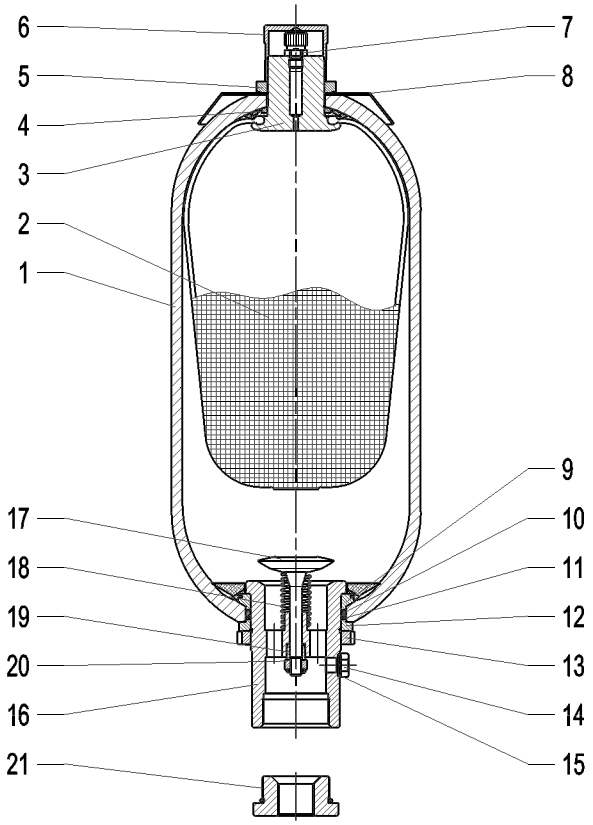

3.1ga

Item	Description	Q.ty	Type					
			AS / ASP 0,2	AS / ASP 0,7	AS / ASP 1 - 1,5	AS / ASP 3	AS / ASP 5	AS / ASP 10 ÷ 55
1	Accumulator shell	1	Not supplied as spare part					
2	Bladder	1	S 0.2 * - 0	S0.7 * - 0	S1*- 0 / S1.5*- 0	S3 * - 0	S5 * - 0	S10 ÷ 55 * - 0
3	Gas valve body	1	B10026 - **	B10107 - **			B10202- **	B10333 - **
4	Rubber-coated washer	1	B10024 - ** / *	B10104 - ** / *	B10106 - ** / *		B10205 - ** / *	B10334 - ** / *
5	Gas valve looknut	1	B10023 - **	B10109 - **				B10302 - **
6	Protection cap	1	B10337 / 00 - ** - *	B10103 - **				B10301 - **
7	Gas-fill valve	1	V 2001 - ** / *	V 2072 - ** - *				
8	Name plate	1	-	D10300A-A			D10300C-A	D10300E-A
9	Retaining ring	1	B10035 - ** / *	B10123 - ** / *	B10127 - ** / *	B10146 - ** / *	B10222 - ** / *	B10317 - ** / *
10	"O" ring	1	0010R4112 - *	0010R4150 - *		0010R0159 - *	0010R6212 - *	0010R0181 - *
11	Supporting ring	1	B10038-T	B10133-T		B10150-T	B10227-T	B10320-T
12	Space ring	1	B10037 - **	B10120 - **		B10223 - **		B10319 - **
13	Fluid port ring nut	1	B10039 - **	B10122 - **		B10217 - **		B10321 - **
14	Bleed screw	1	-	B10128 - **				B10316A - **
15	Seal ring	1	-	B10129 - R				0010T14-1/4 - *
16	Fluid port body std. version	1	B10031 - *** - **	B10115 - *** - **		B10144 - *** - **		B10311 - *** - **
	Fluid port body "P" version		B10031P - *** - **	B10115P - *** - **		B10144P - *** - **		B10311P - *** - **
17	Poppet	1	B10028 - **	B10111 - **		B10221 - **		B10310 - **
18	Spring	1	B10029 - **	B10112 - **		B10149 - **		B10322 - **
19	Brake bushing	1	-	B10113 - **		B10226 - **		B10314 - **
20	Selflocking nut	1	B10033 - **	B10116 - **		B10211 - **		B10315 - **
21	Adapter	1	See chapter 3.1.9.5 ADAPTER					
Standard gas valve ass. (parts 3 ÷ 7)		1	V 2002 - ** / *	V 2021 - ** / *	V 2022 - ** / *		V 2042 - ** / *	V 2062 - ** / *
Standard fluid port ass. (parts 9 ÷ 20)****		1	V 2004 - *** - ** / *	V 2023 - *** - ** / *	V 2024 - *** - ** / *	V 2025 - *** - ** / *	V 2044 - *** - ** / *	V 2064 - *** - ** / *
Gasket sets		1	B2010-* { 0010R2050-* B10341-P B10342-P 0010R4112-* B10038-T }	B2030-* { 0010R2050-* B10341-P B10342-P 0010R4150-* B10133-T B10129-R 0010R2093-* }		B2031-* { 0010R2050-* B10341-P B10342-P 0010R0159-* B10150-T B10129-R 0010R3150-* }	B2050-* { 0010R2050-* B10341-P B10342-P 0010R6212-* B10227-T B10129-R 0010R3150-* }	B2080-* { 0010R2050-* B10341-P B10342-P 0010R0181-* B10320-T 0010T14-1/4-* 0010R3218-* }

* Gasket material ** Component material *** See chapter 3.2.8 table 6 - 7 **** For "ASP" version valve order code become V xxxxP - thread version

3.1gb

3.1.11 COMMISSIONING AND MAINTENANCE

Delivery conditions

Bladder accumulators are delivered pre-charged with nitrogen at a pressure of 30 bar or at value of pressure required at time of order. The pre-charge value is also on the nameplate of the accumulator.
Depending on the size and quantity ordered, the bladder accumulators are shipped in boxes, in cartons, on pallets or wooden boxes on request.
Unless otherwise required, certificates and documentation are provided together with the accumulators.

Handling

The original packaging is suitable for handling and storage. Where necessary, you should use suitable lifting equipment to support the weight of the accumulators.
However protect from impact the packaging and handle it with care.

Storage

During storage in the warehouse, leave the product in its original packaging, keeping it away from heat sources and naked flames. The storage temperature should be between +10 and +40°C.
In addition to six months of storage, the precharge pressure must be to two bar and make sure that inside there is lubrication fluid compatible with bladder polymer.
After six years of storage, it is essential to proceed with the replacement of all elastomeric parts before the commissioning.

Marking on the nameplate of the accumulator

With reference to the PED 97/23/EC classification, Article 3, Paragraph 3 and / or risk categories I or II depending to the volume and maximum working pressure, the accumulator indicates the following data:

- Logo, name and country of the manufacturer
- Mounth/year of production
- Product code
- Serial number
- Maximum PS pressure and PT test pressure in bar
- Min. and max. TS working temperature in Celsius
- Volume V in litres
- Group of fluids allowed (II)
- CE marking (for volumes exceding 1 litre) with the identification number of the notified body
- Pre-charge pressure in bar

It is strictly forbidden to:

- weld, rivet or screw any item of the accumulator
- engrave or permanently stamp the surfaces of the accumulator shell and / or carry out other operations that could affect or change the mechanical properties of the accumulator
- use the accumulator as a structural element: it should not be subjected to stresses or loads
- change the data of the nameplate and / or accumulator without the permission of the manufacturer
- use a (dangerous) fluid of Group 1 with equipment designed and manufactured for fluids of Group 2.

Installation

Before installation, you must perform a visual check to verify that the accumulator has not suffered any damage during shipping / handling.
Verify that the requested type matches with what stamped on the nameplate.
We recommend using the accumulator with a suitable security valve (see Chapter 8) or a security block type BS (see Chapter 9). This device provides user and equipment protection against possible damage caused by pressure surges and also makes the maintenance of the accumulator easier, facilitating the interception and the discharge.
Provide for a space of 200 mm above the gas pre-charge valve to allow access to and control of the pre-charge equipment (see Chap.11.1).
The accumulators type AS may be installed in any position from horizontal to vertical (preferably with the pre-charge valve at the top), and the nameplate must be visible.
Proceed to the assembly so that no abnormal force affects the pipes connected directly or indirectly to the accumulator, so we recommend the use of supporting components and also fastening (please see Chapter 7) to avoid the transmission of vibrations.
If are not used EPE safety blocks, make sure that the accumulator is connected to the hydraulic circuit by suitable connection devices.
Make sure the fluid is compatible with the elastomer of the bladder.
Check that the max. allowed accumulator pressure is equal to or greater than that of the hydraulic circuit and that the temperature during operation is maintained within the range expected.
Make sure the fluid does not contain contaminants and/or abrasive.

Pre-charge of nitrogen

Normally, the bladder accumulators are delivered pre-charged with pressurized gas. The pre-charge of gas can be controlled and / or adjusted before or after installation of the accumulator in the hydraulic circuit.
For the pre-charge, use only industrial dry nitrogen with a purity of min. 99%. It is important to use the nitrogen from a bottle equipped with a pressure reducing valve (see Chap.11.3). Use the EPE pre-charge and charging set type PC to check the charging pressure requires, and adjust if necessary. If the pre-charge pressure is lower than required, connect the charging hose on one side and the other side connect it to the nitrogen bottle or to the pressure reducer. Slowly fill the nitrogen in the accumulator until reaching a pressure slightly higher than that set value (+ 10 ÷ 15%).
Close the bottle and remove the charging hose pipe from the pre-loading set; wait until the gas temperature has stabilized (2 hours) and calibrate the pressure, discharging the excess gas.
Make sure that the gas valve is not subject to losses and, if necessary, use soap and water.
Tighten the protective caps manually.

Hydraulic pressurization

- Check that the pre-charge pressure is adequate for the application.
- Ensure that the hydraulic pressure never exceeds the max allowed pressure (PS) shown on the accumulator shell.
  To avoid this risk, use a safety item (see Chap. 9).

Maintenance

- Periodically check the pre-charge pressure of the gas: after the commissioning, check after 2-3 weeks of operation and if there were no leaks, repeat the operation after 3 months; if the pressure at the same temperature was stable, repeat the test yearly. For heavy-duty applications, check the pre-charge every 6 months.
- Periodically (yearly) carry out a visual inspection of the accumulator in order to detect any early signs of deterioration such as corrosion, deformation, etc.
- Comply with the requirements of the regulations concerning the verification of the functionality of the equipment according to the country of installation of the accumulator.

EPE ITALIANA s.r.l. - Viale Spagna,112 • 20093 Cologno Monzese (Mi) Italy
Tel.: +39 02 25459028 • Fax: +39 02 25 25459773 • E-mail: epeitaliana@epeitaliana.it • Internet: www.epeitaliana.it

Repair

If for failure, scheduled check or retest it is necessary to remove the accumulator from the system, prior to removal, isolate the accumulator from the installation and discharge pressure of the liquid.
All bladder EPE accumulators of the AS and ASP series may be repaired. It may consist in replacing the bladder, the seals, the pre-charge valve and/or the parts of the gas and fluid valve.
For reasons of functionality and security, it is recommended to use only original spare parts.

Disassembly

- Fasten the accumulator firmly in a vice or on a bench in a horizontal position, taking care not to damage the outer surface.

3.1h

- If you have not already carried out, unscrew the cap nut first and then the valve cap of the gas valve.

3.1i

- Allow gas escapes from the bladder with the help of the check valve until a pressure of 0 is displayed. Check if the bladder is now de-pressurizing an open valve.

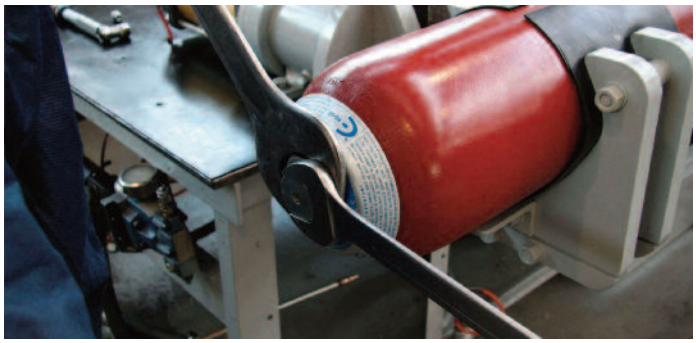

3.1j

- Remove gas valve, unscrew the nut on the gas valve and remove the nameplate.

3.1k

- Undo slotted round nut for hook wrench by using the hook wrench.

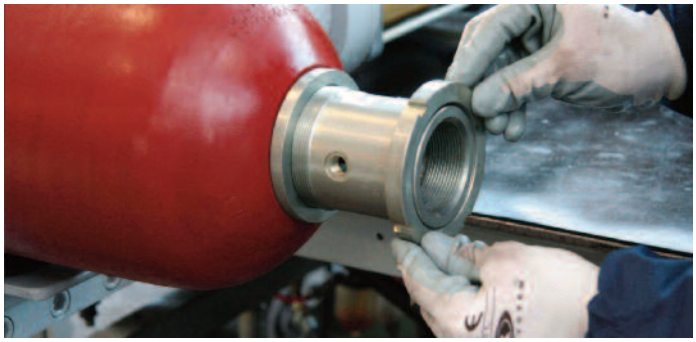

3.1l

- Remove the slotted nut and the retaining ring.

3.1m

- Push enough oil valve into the housing until the sealing ring and the washer can be removed.

3.1n

- Remove the sealing ring and the washer.

3.1o

- Remove the retaining ring, take it out, by carefully pushing the ring together.

3.1p

- Remove the oil valve from the shell.

3.1q

- Fold bladder somewhat and withdraw by turning it slightly.

Refitting

Tightening torques in Nm				
	0.2 l	0.7-1.5 l	3 - 5 l	10-55 l
Fluid port ring nut	60 +10	100 +20	200 +50	450 +50
Bleed screw	3 +1	5 +1	5 +1	30 +10
Gas valve locknut	50 +10	80 +20	100 +20	150 +30
Filling valve V - VX - V2	-	30 +5	30 +5	30 +5
Valve insert V4	-	0.3 +0.2	0.3 +0.2	0.3 +0.2

- Cleaning and testing: clean all metallic parts on accumulator using an organic degraser - visual inspection of oil valve parts (valve poppet, spring, nut, breake bushing)
  - check valve for sluggishness
  - Clean bladder, i.e. using isopropanol. Visual inspection of bladder for faults - inner inspection of shell for signs of corrosion. In event of coated shell, check the condition of the coating.
  Replace the parts deemed to be bad; the o-rings must always be replaced (see spare parts Section 3.1.10).

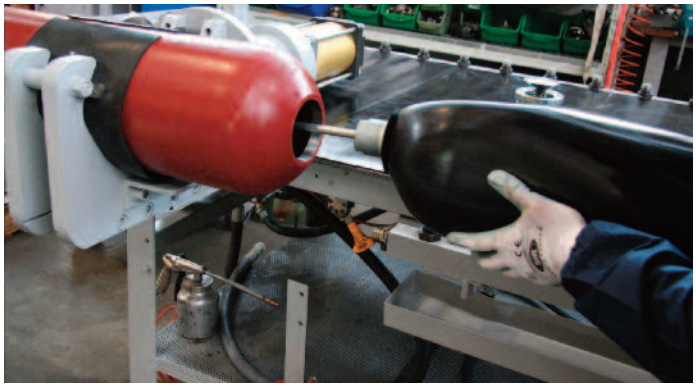

3.1s

- Drain air from bladder by pressing together.

3.1t

- Carefully moisten the inside of the bladder and the shell with the same medium operation. That will be used during operation.

3.1u

EPE ITALIANA s.r.l. - Viale Spagna,112 • 20093 Cologno Monzese (Mi) Italy
Tel.: +39 02 25459028 • Fax: +39 02 25 25459773 • E-mail: epeitaliana@epeitaliana.it • Internet: www.epeitaliana.it

- Reinstall according to this sequence: o-ring, support ring and space ring.

3.1v

- Screw the slotted nut and centre the parts on the oil valve by using a plastic hammer.

3.1w

- Bleed screw with sealing ring.

3.1x

- Mount the bleed screw with its sealing ring.

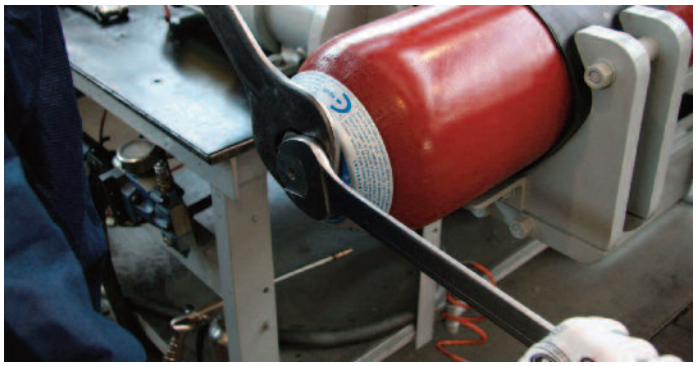

3.1y

- Tighten the hexagon nut SW1 on the gas valve.

3.1z

- Mount the filling valve.

Pre-charge

3.1zz

- Screw the pre-charge PC equipment on the gas valve.
- Connect the equipment to the cylinder of nitrogen or to the pressure reducer with the inflation tube.
- Slowly enter the nitrogen in the accumulator until reaching a pressure slightly higher than the set value (+ 10 ÷ 15%).
- Close the cylinder and remove the connecting pipe from the equipment.
- Wait until the gas temperature has stabilized (2 hours).
- Calibrate the pressure discharging the excess gas.

Make sure that the gas valve is not subject to losses and, if necessary, use soap and water.
Tighten the protective caps manually.

Demolition and recycling of the accumulator

Before accumulator demolition or recycling, you should always discharge completely the pre-charge pressure and remove the gas valve.
If needed, proceed decontaminating in relation to the fluid used prior to demolition.

3.1.12 REPAIR TOOLS

3.1.12.1 BLADDER PULL ROD

The pull rod screwed to the gas valve of the bladder for easy assembly into shell during reassembly. Pull rod is complete with fitting for EPE gas valve and 3 extension segments to accommodate all size of accumulators.
Code for complete kit: B2505

Dimension

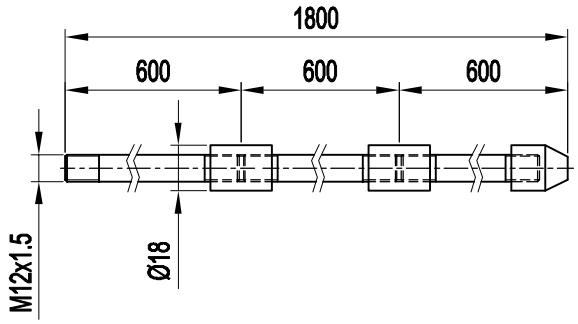

3.1aa

3.1.12.2 SPANNER WRENCH

Fits all standard size bladder accumulator. It is used to remove or install lock nut on fluid port assembly.
0,7÷1,5 lt code 2506/58
3÷5 lt code 2506/68
10÷55 lt code 2506/105

Dimension

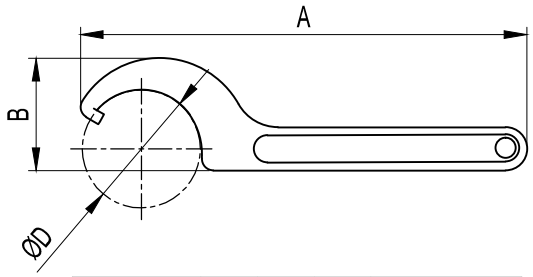

CODE	A	B	ØD	For Accumulator
B2506/58	241	45	58	0.7 ÷ 1.5
B2506/68	241	43	68	3 ÷ 5
B2506/105	336	82	105	10 ÷ 55

3.1ab

3.1.12.3 LIFTING HOOK

To be used for the safe lifting of mounted accumulators:
For accumulators 0,7÷5 lt (M22x1,5) code B2507/2
For accumulators 10÷55 lt (M50x1,5) code B2507/5
For accumulators V4 (7/8" UNF) code B2507/7

Dimension

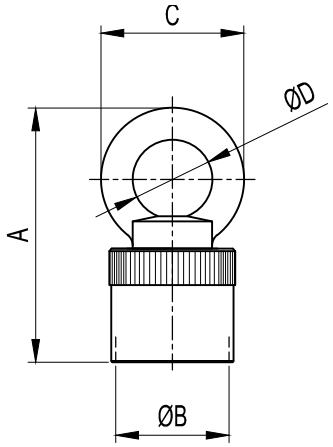

CODE	A	ØB	C	ØD	For Accumulator
B2507/2	100	M22x1.5	63	35	0.7 ÷ 1.5
B2507/5	112	M50x1.5	63	35	3 ÷ 5
B2507/7	100	7/8" UNF	63	35	10 ÷ 55

3.1ac

3.1.12.4 CORE TOOL

The core tool is used to remove and reinstall the valve core type V4.
Code B2508

Dimension

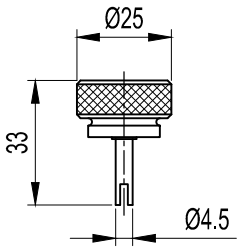

3.1ad

Reproduction is forbidden.
In the spirit of continuous improvement, our products may be changed.

EPE ITALIANA s.r.l. - Viale Spagna,112 • 20093 Cologno Monzese (Mi) Italy
Tel.: +39 02 25459028 • Fax: +39 02 25 25459773 • E-mail: epeitaliana@epeitaliana.it • Internet: www.epeitaliana.it